Linde Material Handling

Automatic Storage Solutions

K-MATIC

Load capacity 1.45 t | Series 5231

PB

Reliable logistics in narrow aisle warehouses

- → Automated truck with lifting capacity up to 1450 kg and 14 m lifting height (16 m lifting height possible on request)
- → Control via intelligent contour navigation without additional infrastructure
- → Seamless interaction with conveyor technology and transfer stations
- → Straightforward integration into common WMS and ERP systems
- → Use as a single unit or in an automated fleet

TECHNICAL DATA (according to VDI 2198)

Characteristics	1.1	Manufacturer (abbreviation)		Linde MH	Linde MH	Linde MH
	1.2	**Manufacturer's type designation**		**K-MATIC**	**K-MATIC**	**K-MATIC**
	1.2a	Series		5231	5231	5231
	1.3	Drive		Battery	Battery	Battery
	1.4	Operation		Automated	Automated	Automated
	1.5	Rated capacity/rated load	Q (t)	1.45	1.45	1.45
	1.6	Load centre distance	c (mm)	625	625	625
	1.9	Wheelbase	y (mm)	1992	2212	2212
Weight	2.1	Service weight	kg	9258	11156	12477
	2.2	Axle loading, laden front/rear	kg	2828/7730	3617/8768	4013/7390
	2.3	Axle loading, unladen front/rear	kg	3595/5444	4309/6626	4734/7390
Tyres/chassis	3.1	Tyres: solid rubber, superelastic, pneumatic, polyurethane		Polyurethane	Polyurethane	Polyurethane
	3.2	Tyre size, front	mm	406/170	406/170	406/170
	3.3	Tyre size, rear	mm	370/160	370/160	370/160
	3.5	Wheels, number front/rear (x = driven)	1x/2	1x/2	1x/2	1x/2
	3.6	Tread, front	b10 (mm)	1395	1445	1545
	3.7	Tread, rear	b11 (mm)	0	0	0
Dimensions	4.2	Mast height, lowered	h1 (mm)	4900	5400	6400
	4.3	Free lift	h2 (mm)	-	4150	5150
	4.4	Lift	h3 (mm)	7200	11550	14350
	4.5	Mast height, extended	h4 (mm)	9800	14150	16950
	4.7	Height of overhead guard (cabin)	h6 (mm)	2555	2555	2555
	4.8	Seat height relating to SIP/stand height	h7 (mm)	460	460	460
	4.11	Additional lift	h9 (mm)	1800	1800	1800
	4.15	Height, lowered	h13 (mm)	60	60	60
	4.19	Overall length	l1 (mm)	3843	4158	4258
	4.21	Overall width	b1/b2 (mm)	1450/1600	1450/1650	1450/1750
	4.22	Fork dimensions DIN ISO 2331	s/e/l	50/120/1250	50/120/1250	50/120/1250
	4.24	Fork carriage width	b3 (mm)	710	710	710
	4.25	Fork spread	b5 (mm)	470/640	470/640	470/640
	4.29	Reach, lateral	b7 (mm)	1405	1430	1510
	4.31	Ground clearance, laden, below mast	m1 (mm)	40	40	40
	4.32	Ground clearance, centre of wheelbase	m2 (mm)	87	87	87
	4.34	Aisle width predetermined load dimensions (800 × 1200/1000 × 1200)	Ast (mm)	1850/--	1850/1900	2000/2000
	4.35	Turning radius	Wa (mm)	2257/2435	2477/2655	2477/2655
	4.38	Distance to swivelling-fork pivot	l8 (mm)	1053	1148	1248
Performance	5.1	Travel speed, laden/unladen	m/s	2/2	2/2	2/2
	5.2	Lifting speed, laden/unladen	m/s	0.4/0.4	0.4/0.4	0.4/0.4
	5.3	Lowering speed, laden/unladen	m/s	0.4/0.4	0.4/0.4	0.4/0.4
	5.4	Reaching speed, laden/unladen	m/s	0.29/0.29	0.29/0.29	0.29/0.29
	5.10	Service brake		Regenerative	Regenerative	Regenerative
Electric-engine	6.1	Drive motor rating S2 60 min	kW	7.0 kW/S2 = 60 min	7.0 kW/S2 = 60 min	7.0 kW/S2 = 60 min
	6.2	Lift motor rating at S3 15%	kW	24.0 kW/S3 = 15%	24.0 kW/S3 = 15%	24.0 kW/S3 = 15%
	6.3	Battery according to DIN 43531/35/36 A, B, C, no		IEC 254-2; A	IEC 254-2; A	IEC 254-2; A
	6.4	Battery type, voltage, nominal capacity K5	V/Ah	PzS, 80 V/700 Ah	PzS, 80 V/840 Ah	PzS, 80 V/840 Ah
	6.5	Battery weight (+/-5%)	kg	1863	2178	2178
Additional data	10.7	Sound pressure level LpAZ (at the operator's seat)	dB(A)	68	68	68

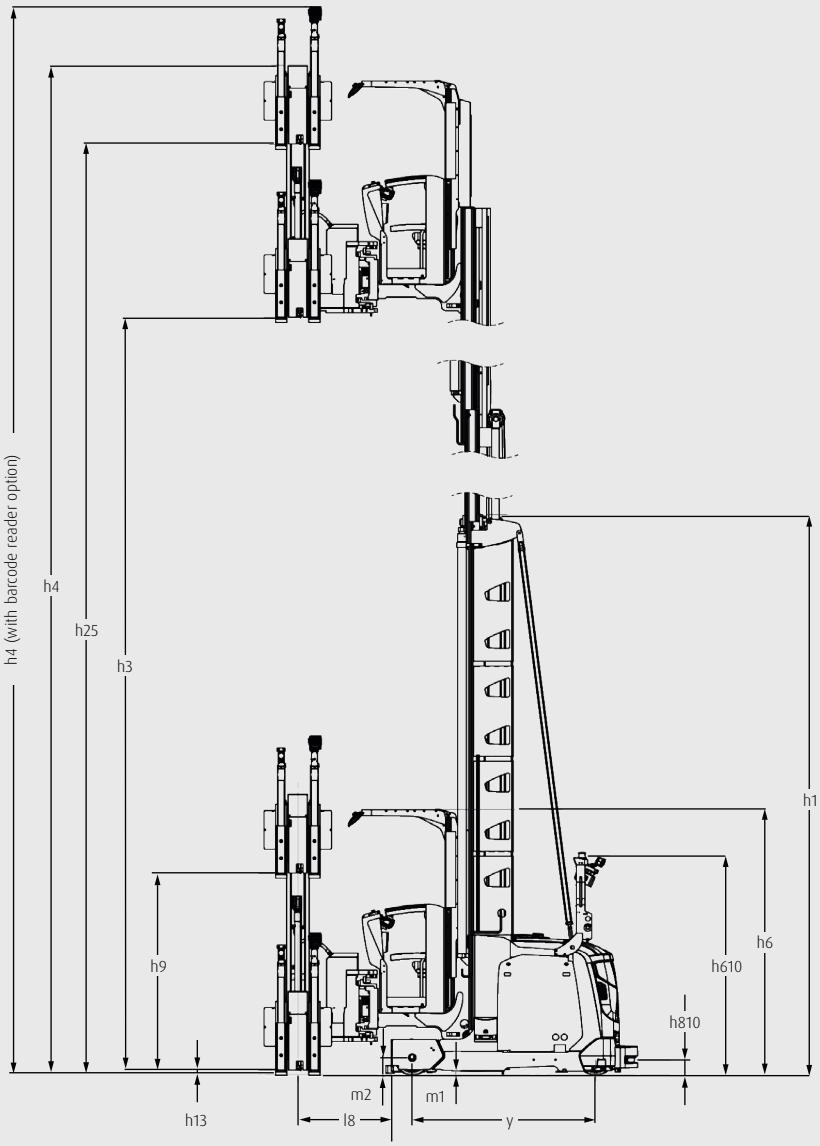
h4 (with barcode reader option)
h4
h25
h3
h9
h13
h1
h6
h610
h810
m2
m1
l8
y

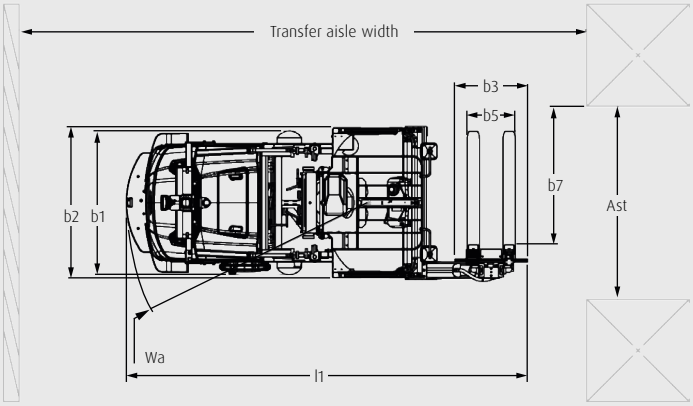
Transfer aisle width
b3
b5
b7
Ast
b2
b1
Wa
l1

ADDITIONAL DATA FOR AUTOMATIC OPERATION

	Maximum lifting height (automatic mode)	h25 (mm)	8660	13010	15810
	Scan height, localisation sensor	h610 (mm)	2300	2300	2300
	Scan height, front safety scanner	h810 (mm)	160	160	160
	Scan height, side safety scanner	h820 (mm)	401	401	401
	Scan height, back safety scanner	h840 (mm)	233	233	233
	Precision of the longitudinal positioning of the truck at standstill	+/- (mm)	20	20	20
	Precision of the lateral positioning of the truck at standstill	+/- (mm)	20	20	20
	Lift control accuracy	+/- (mm)	10	10	10
	Maximum climbing ability, with/without load	(%)	3/3	3/3	3/3

MAST TABLES

STANDARD MAST (in mm)

Lift	h3: 3200	h3: 4200	h3: 5200	h3: 6200	h3: 7200
Height measurements	h1: 2900 h4: 5900 h2: -	h1: 3400 h4: 6900 h2: -	h1: 3900 h4: 7900 h2: -	h1: 4400 h4: 8900 h2: -	h1: 4900 h4: 9900 h2: -
Manufacturer's type designation					
K-MATIC	○	○	○	○	○

Lift	h3: 8200	h3: 9000	h3: 10000	h3: 10800	h3: 11800
Height measurements	h1: 5400 h4: 10900 h2: -	h1: 5900 h4: 11700 h2: -	h1: 6400 h4: 12700 h2: -	h1: 6900 h4: 13500 h2: -	h1: 7400 h4:14500 h2: -
Manufacturer's type designation					
K-MATIC	○	○	○	○	○

TRIPLEX MAST (in mm)

Lift	h3: 5050	h3: 6350	h3: 7450	h3: 8750	h3: 10050
Height measurements	h1: 2900 h4: 7750 h2:1650	h1: 3400 h4: 9050 h2: 2150	h1: 3900 h4:10150 h2: 2650	h1: 4400 h4: 11450 h2: 3150	h1: 4900 h4: 12750 h2: 3650
Manufacturer's type designation					
K-MATIC	○	○	○	○	○

Lift	h3: 11550	h3: 12850	h3: 14350
Height measurements	h1: 5400 h4: 14250 h2: 4150	h1: 5900 h4: 15550 h2: 4650	h1: 6400 h4: 17050 h2: 5150
Manufacturer's type designation			
K-MATIC	○	○	○

○ Optional equipment

h1: Mast height, lowered
h2: Free lift
h3: Lift
h4: Mast height, extended

STANDARD AND OPTIONAL EQUIPMENT

	Manufacturer's type designation/Equipment	K-MATIC
On-board software	Contour navigation	●
	User-friendly log file analysis	●
Off-board software	Advanced routing algorithm	●
	Editor for integrating different shelving systems	●
	Interfaces to existing Warehouse Management System (WMS), Enterprise Resource Planning System (ERP) or similar	○
	Interfaces to infrastructure: doors, conveyors, etc.	●
	Linde Warehouse Management System – Linde Warehouse Navigator	○
	Email updates on performance data of automated guided vehicles (AGVs)	●
Safety	Front and rear safety scanners	●
	Side safety scanners	●
	2D laser protection curtain in driving direction	●
	Linde BlueSpot – visual warning signal for pedestrians and other operators	●
	Additional emergency stop buttons	●
	Visual warning signals – lights indicating truck status	●
	Acoustic warning signals	●
Load handling	Load detection with 3D camera	●
	2D barcode reader	○
	1D barcode reader	○
	Anti-drag or anti-push detection of load carriers	●
Mast	Standard masts for lift heights up to 14 m	○
	Triplex masts for lift heights up to 14 m	○
	Auxiliary lift 1800 mm	●
Environment	WLAN communication	●
	Operator interface – touch screen display	●
	Navigation laser	●
	ComBox – communication box	○
Energy	Lead-acid batteries for manual charging	○

● Standard equipment ○ Optional equipment

CHARACTERISTICS

Maximum safety thanks to all-round monitoring

Safety

→ All-round view of the working environment
→ Laser-based safety system detects people and obstacles
→ Multiple emergency stop buttons for rapid hazard prevention
→ Acoustic and visual signals ensure early warning of potenital issues

Guidance control for the MATIC fleet

Handling

→ 3D pallet recognition simplifies loading and unloading of different load carriers
→ Control system for all MATIC trucks
→ Environment mapping for rapid adaptation to changing environments
→ Manual control option for increased flexibility
→ Optional barcode scanner for precise tracking of goods

7 inch screen – see everything at a glance

Service

→ 7 inch screen provides all important truck and job data at a glance
→ Wireless transmission of maintenance-relevant truck data
→ Preventive maintenance ensures maximum truck availability
→ Use of PIN ensures safe service mode

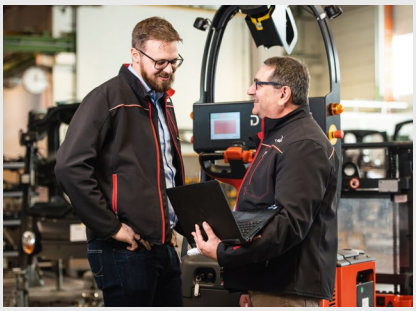

Always process-oriented

Sales and Implementation

→ Project-specific automated solutions including dynamic simulation and proof of concept on site
→ Manual handling processes and the degree of automation can be adapted to suit the application
→ Single point of contact at Linde MH from initial contact to project implementation and commissioning
→ Intelligent and scalable software solutions provide optimum control over processes
→ Project management and commissioning according to Linde MH standards with standardised tools and templates used in every project

Presented by:

Subject to modification in the interest of progress. Images and technical specifications may include options and are not binding for actual constructions. All dimensions subject to usual tolerances.

Linde Material Handling GmbH
Carl-von-Linde-Platz | 63743 Aschaffenburg | Germany
Phone + 49 6021 99 0 | Fax + 49 6021 99 1570
www.linde-mh.com | info@linde-mh.com

Printed in Germany | DS_K-MATIC_5231_en_A_0224